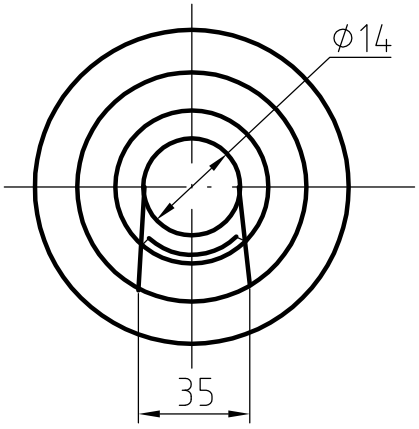

A

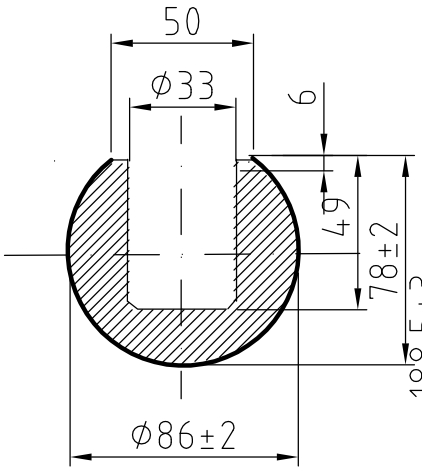

B —— B

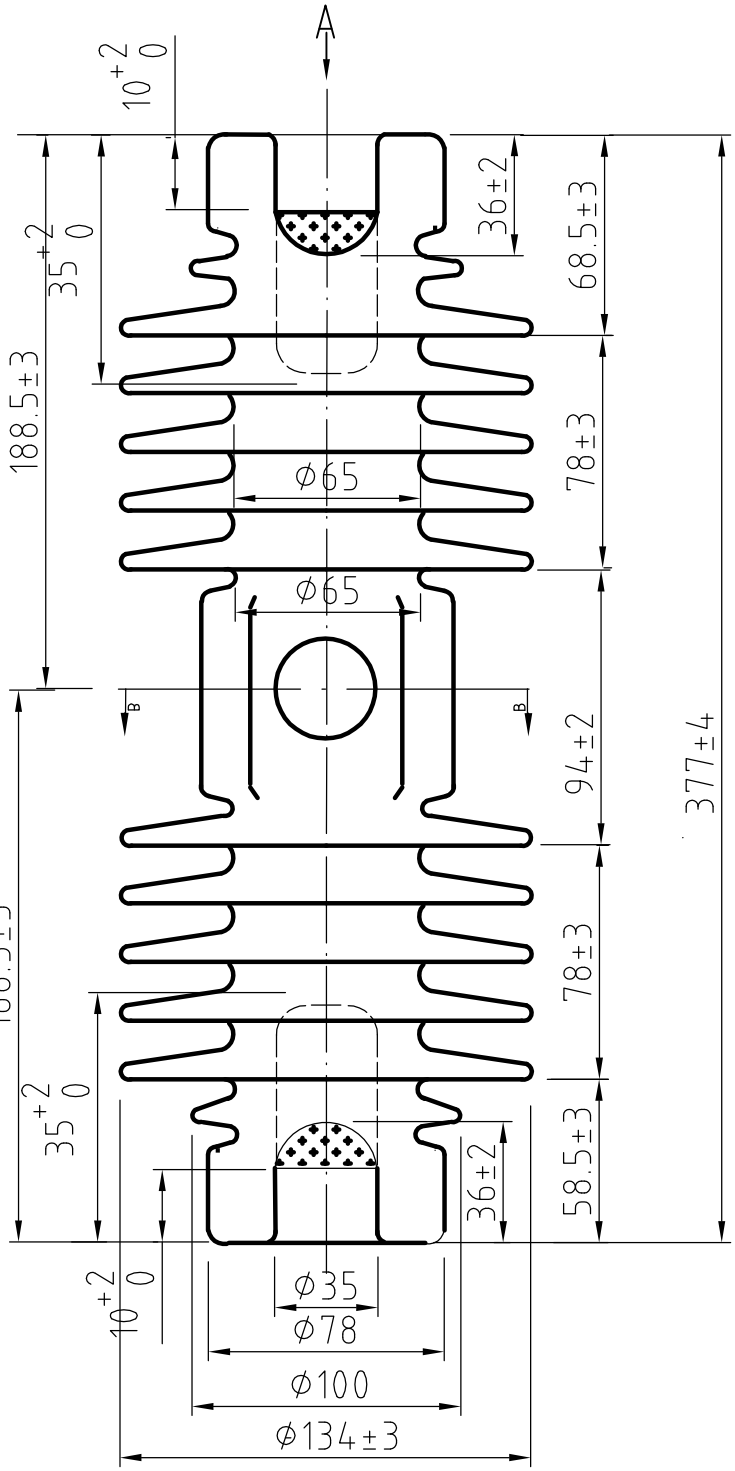

Greepage Distance:490mm

Glazed:Grey Color

				Kaiway Electric Industrial Mfg Co.,LTD
				Cut Out Insulator
Mark	Modify	Sign	Date	Weight / Scale / AF-15376
Design		Standard		
Check				518302
Process		Aprrove		Page No of